NOTRE DAME UNIVERSITY

BANGLADESH

EEE Lab Report-09

Course Title: Electronic Devices and Circuits Lab

Course Code: EEE-2108

Experiment No: 09

Name of the Experiment: The BJT Biasing Circuits

Date of Experiment: 12-10-23

Date of Submission: 19-10-23

Submitted by:

Group: B
Name: Istiak Alam
ID: 0692230005101005
Batch: CSE-20

Submitted To:

Dhiman Roy
Lecturer, NDUB

Experiment No 9

Name of experiment: The BJT Biasing Circuit.

Theory: Biasing a BJT circuit means to provide appropriate direct potentials & currents, using external sources, to establish an operating point or Q-point in the active region. Once the Q-point is established, the time varing excursions of input signal should cause an output signal of same waveform. If the output signal is not a faithful reproduction of the input signal. There are different types of biasing circuit. Thoes are the fixed bias and self-bias circuit.

Equipments & Components:

1. NPN transistor — C828 , BD135 — 1 piece each
2. Resistor — 470kΩ, 560Ω, 10kΩ, 220kΩ
3. POT — 10kΩ, 100kΩ
4. Trainer Board
5. DC power supply
6. Chords & wire as required.

Experimental Setup:

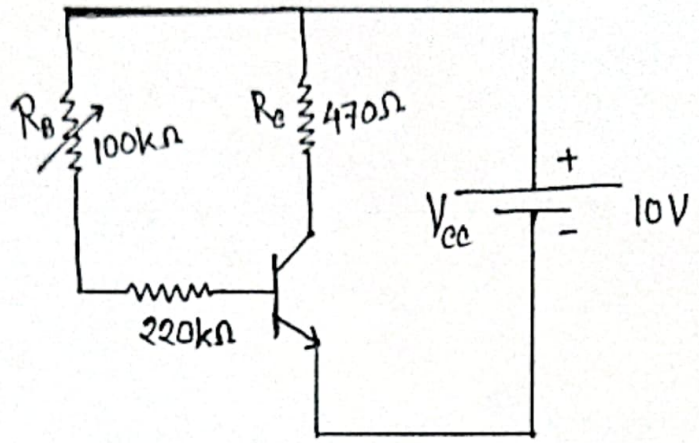

Fig 9.1: Fixed Bias Configuration Circuit

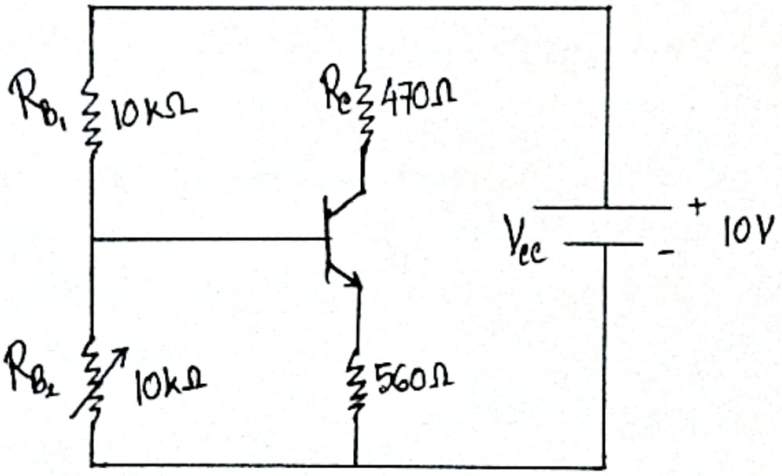

Fig: 9.2: Self Biasing Configuration Circuit

Procedures:

1. Arranged the circuit shown in figure 9.1 by C828. We have recorded R_c & set R_B to maximum value
2. Decreasing POT R_{B_2} gradually so that $V_{CE} = \frac{V_{cc}}{2}$
3. Measuring voltage across R_c & V_{CE}. Record the Q-point as $Q(V_{CE}, I_c)$
4. Replace the C828 transistor by BD135 & repeat step 2 & 3.
5. Arrange the circuit shown in figure 9.2 by C828. Record R_c & Set R_B to maximum value.
6. Increase POT R_{B_2} gradually so that $V_{CE} = \frac{V_{cc}}{2}$
7. Measure voltage across R_c & V_{CE}. Record the Q-point.
8. Replace the C828 transistor by BD135 & repeat step 5 & 6.

Student ID: 3, 5, 8(B19)

Data Sheet: Fixed Bias

(i) For, BD135,

$V_{CE} = 5.34\,V$

$V_{RC} = 4.61\,V$

$\therefore I_C = \frac{V_{RC}}{R_C} = \frac{4.61\,V}{470\,\Omega} = 9.8\,mA$

$\therefore Q(5.34\,V, 9.8\,mA)$

(ii) For C828,

$V_{CE} = 4.65\,V$

$V_{RC} = 5.34\,V$

$\therefore I_C = \frac{V_{RC}}{R_C} = \frac{5.34\,V}{470\,\Omega} = 11.38\,mA$

$\therefore Q(4.65\,V, 11.38\,mA)$

07/10/23

Self Bias:-

(i) For BD-135,

$$V_{CE} = 5.00V$$

$$I_c = \frac{V_{Rc}}{R_c} = \frac{2.32}{470} = 4.93mA$$

$$Q = (5.00V, 4.93mA)$$

(ii) For C828,

$$V_{CE} = 5.01V$$

$$I_c = \frac{V_{Rc}}{R_c} = \frac{2.31}{470} = 4.91\ mA$$

12/8/23

$$Q = (5.01V, 4.91mA)$$

Discussion:

(i) use low voltage & current.

(ii) Be careful with reverse voltage to prevent damage.

(iii) when changing the value of variable resistance (POT), we have to be more careful.

(iv) Avoid overloading & short circuit by some of our trainer board is deffected and shortated.

(v) Avoiding machanical error consciously.

(vi) Follow guidelines & manual.